Multicolor Production Printing Using Computer to Plate Technologies

Martin Schmitt-Lewen
Heidelberger Druckmaschinen AG
Heidelberg, Germany

Abstract

Conventional printing technologies for high quality printing, such as offset printing, require a printing plate as a master for each color to be printed. The production of these printing plates is done most efficiently in computer to plate technologies either outside or inside the printing press.

This paper deals with and compares the different types of computer to plate systems, namely internal drum, external drum and flat-bed architectures. Recent developments in imaging system design, such as multibeam lasers, are also taken into account.

Those imaging technologies capable of imaging printing plates within a press (computer to press) are also reviewed, both for conventional and waterless offset printing.

Different printing plate technologies for computer to plate and computer to press are discussed together with the respective imaging systems and applications.

Computer to press/direct imaging technology requires that plate materials be imaged and processed in the printing press, as is the case with thermal plates.

Examples of the different computer to plate systems and computer to press/direct imaging systems are given.

Introduction

As shown in fig. 1, computer to plate technology is one way of realizing digital printing. This paper the focuses on lithography, i.e., offset printing.

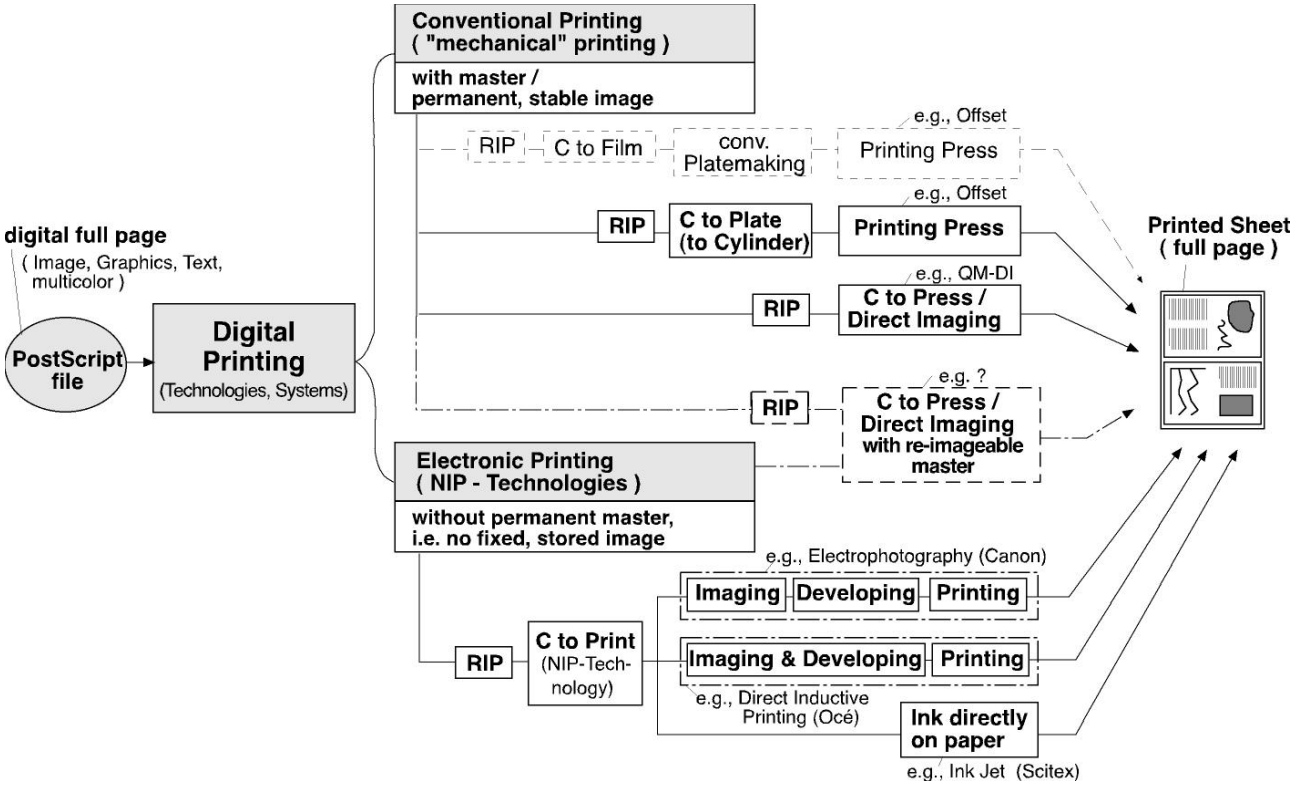

Figure 1. Digital printing technologies are based on the digital set-up of the page or sheet to be printed[1]

In Offset printing, plates are used. These plates serve as masters for the image to be printed. In 4-color printing, for example, four different plates are needed, each representing a different color. In offset printing, image reproduction is based on screening technologies. Consequently, continuous tones can be reproduced as halftones by area coverage of the respective screen cell as shown in fig. 2.

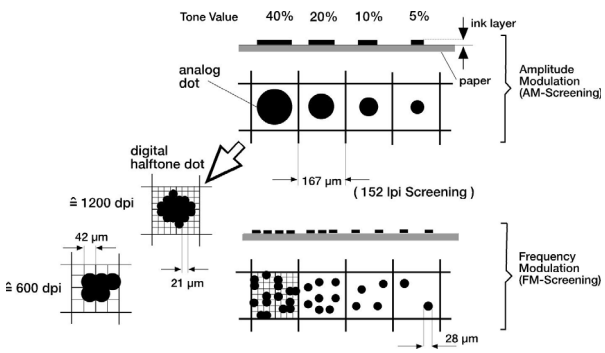

Figure 2. Screening technologies for creating halftones as used in offset printing.[1,4,8]

The demands on the quality of reproduction determine the parameters of the imaging systems, such as resolution or addressability. Another issue is speed, which is determined by plate sensitivity, laser power, number of imaging beams, etc.[4]

Computer to plate imaging heads, as a module, are also used in computer to press/direct imaging systems.[4,5]

Computer to plate technologies for platemaking in lithographic printing are state-of-the-art and have become widespread in the last five years.[1,2,8] Different design concepts exist for CtP systems and their respective imaging heads. In some respect these concepts are closely related to plate technologies, which have to be adapted to the imaging system.[1,6]

Design Principles in Computer to Plate Technologies (CtP)

Internal Drum Systems

Internal drum systems are characterized by a rigid trough within which the plate is fixed by means of a vacuum. Imaging is done by a modulated laser beam that is directed to the plate surface via a rotating mirror (fig. 3). The laser scans the surface during the imaging process. In most cases one laser beam is used in internal drum systems, but in some newly announced systems multibeam imaging is also employed. An example of such a system able to image thermal plates is shown in fig. 4. The design of internal drum systems is not feasible for computer to press/direct imaging presses.

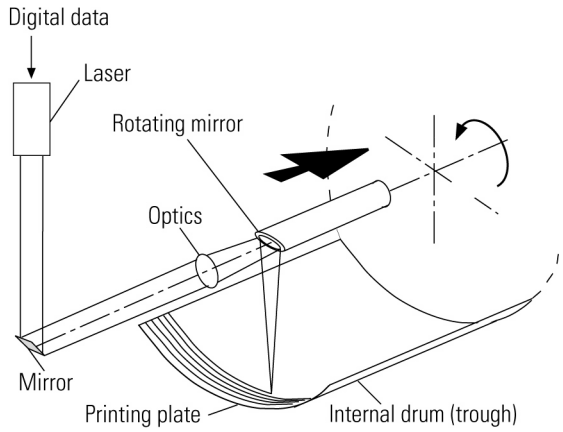

Figure 3. Computer to plate in internal drum design[1,2]

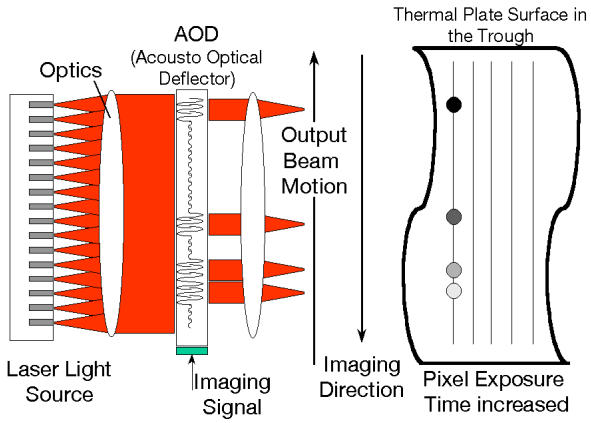

Figure 4. Example of multibeam imaging (for longer exposure time per pixel) for internal drum design (T-Wave, Gretag Imaging/Cymbolic Sciences).[4]

External Drum Systems

The design of an external drum CtP system is shown in fig. 5. The optical system is located on the outside of the rotating drum. The drum together with the plate revolves past the optical system, which records one line after another and is itself guided along the axis.[1,2,8]

Figure 6 shows an example of a multibeam computer to plate system in an external drum design with 230 thermal laser beams (830 nm). The Trendsetter 3244+, for example, has an addressability of 2400 dpi. Imaging of an 8-page plate takes 5 min (at 2400 dpi). Optionally, this systems can also be used for proofing (screen/true proof, [1]).

Other multibeam CtP systems are, for example, the Topsetter models (Heidelberg) with 32 thermal laser diodes (max. addressability 4000 dpi).

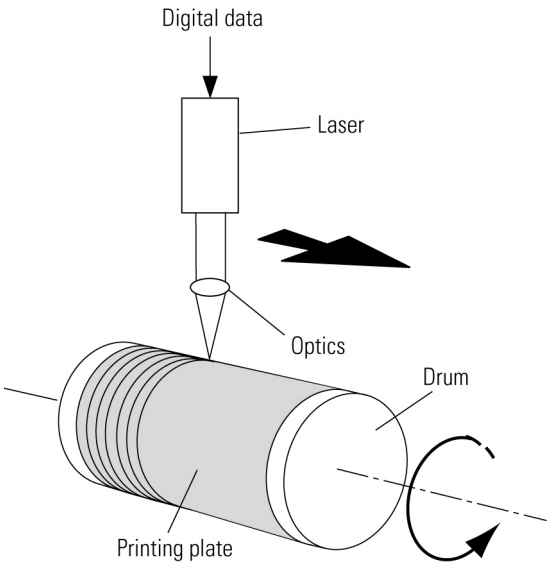

Figure 5. Computer to plate in external drum design.[1,2,8]

Figure 6. Example of a computer to plate system; external drum design (Trendsetter, Heidelberg/Creo)

Flat-Bed Systems

The design of a flat-bed CtP system is shown in fig. 7. The printing plate is held flat on a level base during the imaging process. In the simplest and most commonly used example of imaging, the laser beam is deflected line by line across the plate by a rotating polygon mirror and by means of imaging and correction optics.

Light Sources, Light Modulators, Multibeam Systems, and Plates for Digital Imaging

Figure 8 shows different light sources used in imaging systems for graphic arts applications, for example, in computer to plate systems.

Systems based on visible light, for example, make use of frequency-doubled Nd:YAG lasers (FD-YAG) emitting at 532 nm (green). Printing plates using photopolymers are one example of plates suitable for such light sources. These plates are, in the case of negative-working plates, imaged in the ink-accepting areas. To sufficiently crosslink the polymer, the plate is heated after imaging before being chemically processed (preheating). The aluminum surface of the base material is water-receptive and represents the non-image areas that are created (exposed) during the development process. Other plate technologies for CtP in the visible range, for example based on silver diffusion, also exist.[1,4,810,11]

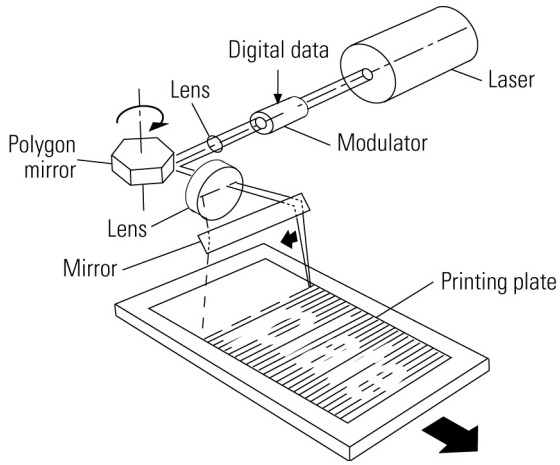

Figure 7. Computer to plate in flat-bed design.[1,2,8]

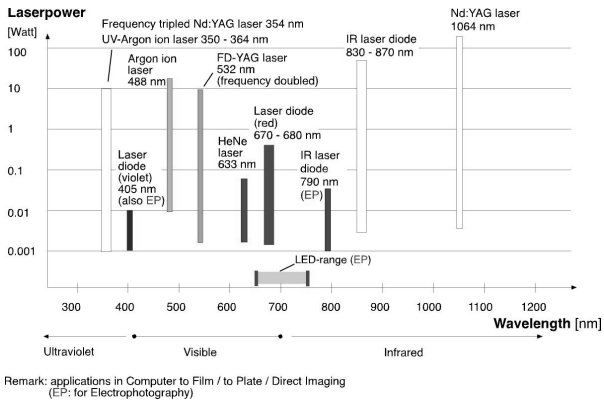

Figure 8. Light sources (selection) used in imaging systems, e.g., in computer to ... technologies.[1,4]

Infrared/thermal technology. Examples of lasers emitting in the IR region are given in fig. 8. Plates used for thermal technology are sensitive in the infrared (IR) range, e.g., 800...1100 nm. Thermal plates can therefore be handled in daylight. Thermal plates require a higher area-related energy for imaging. For this reason, multibeam IR laser systems are preferred since they can most easily be realized in external drum architectures (fig. 9). Different kinds of thermal-sensitive plates exist. They are characterized by thermally-induced polymerization, thermally-induced decomposition, or ablation processes.[10,11] There are also plates available for waterless offset.

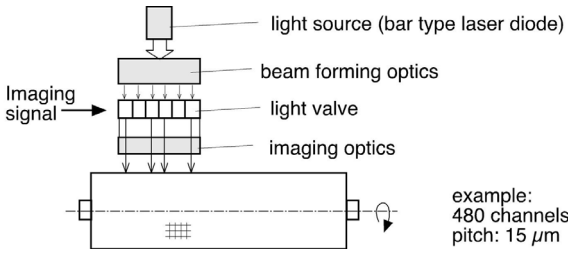

Figure 9. Applying spatial light modulators (light valve) for multibeam imaging.[1,4,6]

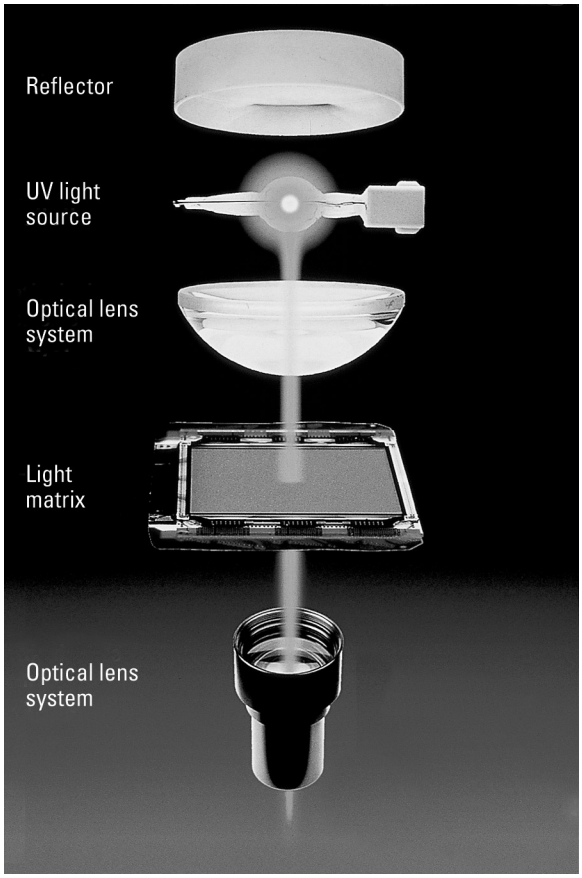

Figure 10. UV imaging using spatial light modulators (LCD) for multibeam imaging in flat-bed systems (basysPrint)

An imaging system based on a UV light source and an array of light valves, namely a LCD system, is shown in fig. 10. Instead of the LCD light modulator a Digital Micromirror Device (DMD) can be used.[1,4,6] The plates exposed are the conventional UV sensitive ones.

Blue-violet lasers emitting at around 405 nm have recently become available (e.g., due to DVD technology in consumer devices). Single-beam laser diodes of this type can be used in internal drum systems (cf. fig. 3). As opposed to other plates, that are sensitive to visible light, blue-violet sensitive plates for these systems require yellow safe light but do not require a darkroom, which is one advantage of this technology. Highly sensitive plates of the silverhalide (diffusion) and photopolymer type are the two alternative technologies that have already been announced by different manufacturers.

Systems for Computer to Press/Direct Imaging

As already mentioned, external drum imaging systems for computer to plate can be used for imaging in the press (computer to press/direct imaging).

Examples of imaging systems using multibeam lasers are shown in fig. 9 and fig. 11.

As shown in fig. 11, laser imaging can be done by ablation. In this example, waterless offset is realized. This means that a special type of plate is required with an ink-repellent top coating of silicone. The laser beams ablate the silicone and the exposed areas become ink-accepting.[1,5]

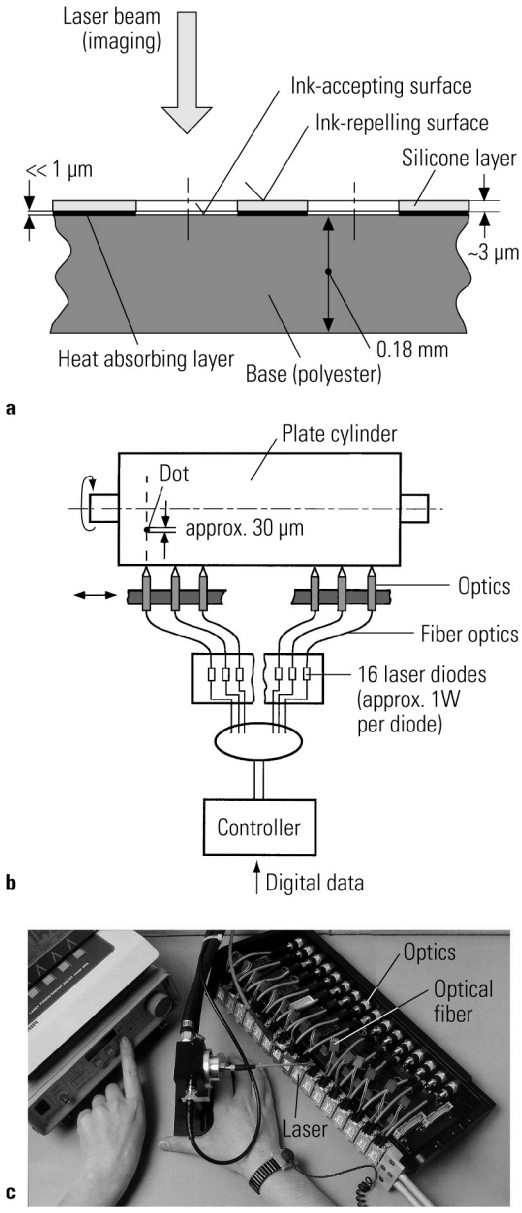

Figure 11. Multibeam imaging head for direct imaging;max. addressability 2540 dpi (Heidelberg/Presstek).[1,4,5,8]

Examples of presses using multibeam laser imaging are the Quickmaster DI (fig. 12), 74 Karat (fig. 13), and Speedmaster 74 DI (figs. 14, 15).[3] A comprehensive description of many computer to press systems is given in Ref. 1.

A prerequisite for direct imaging is that the plates be imaged and processed in the press. The imaging system shown in fig. 11 meets this demand. The plate is cleaned after imaging, and the ablated silicone particles can be wiped away.

The 74 Karat press shown in fig. 13 uses basically the same kind of top coating for waterless offset printing as shown in fig. 11, but on an aluminum substrate.

The A2-size Speedmaster 74-DI press shown in fig. 14 and fig. 15 is an example of a computer to press for conventional offset printing.

Computer to press/direct imaging using rewritable surfaces has been discussed the past few years.[1,5] MAN Roland launched the DICOweb at DRUPA 2000.

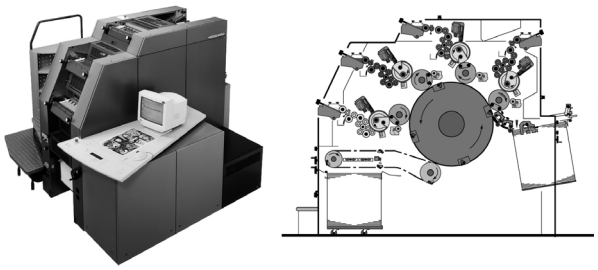

Figure 12. Computer to press/direct imaging system (Quickmaster DI, Heidelberg)

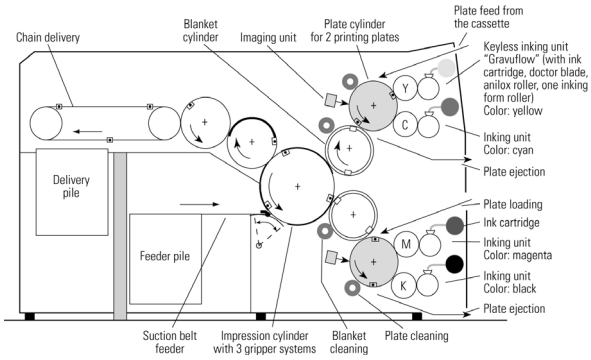

Figure 13. Computer to press/direct imaging system (74 Karat, KBA/Scitex; not confirmed).[1]

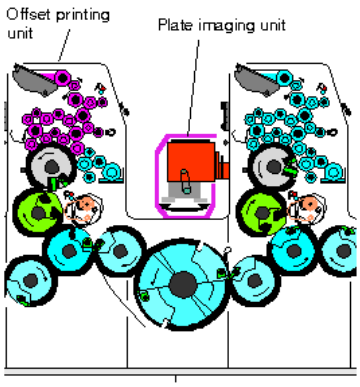

Figure 14. Computer to press/direct imaging system; cf. fig. 15 (Speedmaster 74 DI, Heidelberg)

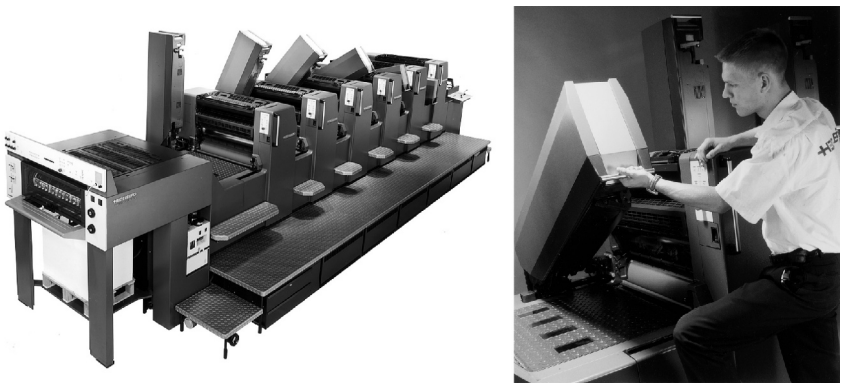

Figure 15. Computer to press/direct imaging system; cf. fig. 14 (Speedmaster 74 DI, Heidelberg)

Conclusion

A selection of current technologies based on computer to plate imaging systems has been discussed.

Internal drum systems are starting to enjoy somewhat of a resurgence due to newly developed multibeam solutions for thermal plates.

Blue-violet single-beam laser diodes could also help internal drum computer to plate systems in regaining ground.

Most of today's computer to plate systems make use of external drum multibeam architectures that are also suitable for direct imaging applications (computer to press) and thermal plate technologies.

References

1. Kipphan, H. (editor and author): Handbook of Printmedia - Technologies and Production Methods (to be published in May 2001); German edition: Handbuch der Printmedien - Technologien und Produktionsverfahren. Springer, Heidelberg 2000.
2. Seydel, M.: Computer to Plate: Digital Workflow and Integration into Quality Offset Printing. TAGA-Proceedings 1996.
3. d´Heureuse, W. ; Kipphan, H: Print Technologies and Design Concepts for Hybrid Printing Systems (this conference: IS&T/DPP2001, Antwerp 2001).
4. Kipphan, H.: Imaging Systems for High-Quality Digital Production Printing. Vocal Paper 4300-01 at IS&T/SPIE´s 13th International Symposium: Electronic Imaging 2001, Science & Technology Conference: Color Imaging: Device-Independent Color, Hardcopy and Graphic Arts VI. San Jose (CA) / Heidelberger Druckmaschinen AG, Heidelberg 2001.
5. Kipphan, H: Direct Imaging in Theory and Practice-Computer to Press vs. Computer to Print. TAGA Proceedings, Rochester (NY) 1996, pp. 589-612.
6. Kipphan, H.: Status and Trends in Digital Multicolor Printing-Technologies, Materials, Processes, architecture, Equipment and Market. NIP 13: International Conference on Digital Printing Technologies (Proceedings). The Society for Imaging Science and Technology (IS&T), Springfield (VA) 1997, pp. 11-19.
7. Kipphan, H.: Computer to...-Technologies; New Developments in the Graphic Arts Industry for Producing Multicolor Printed Products. Tenth International Congress on Advances in Non-Impact Printing Technologies (Proceedings). The Society for Imaging Science and Technology (IS&T), Springfield (VA) 1994, pp. 301-306.
8. Kipphan, H.: Digital Multicolor Printing; State of the Art and Future Challenges. SPIE Proceedings Color Hardcopy and Graphic Arts IV, Vol 2413, Bellingham (WA) 1995, pp.7-31.
9. Kipphan, H.: Future Challenges for Digital Offset Printing - Advances in Printing Science and Technology (vol. 25).-Advances in Offset Printing (ed. J. Anthony Bristow, IARIGAI). Pira International, Leatherhead (UK) 1999, pp. 127-132.
10. Van hunsel, J. et al.: Thermostar: A new Thermal Litho Printing Plate Technology for CTP Recording. TAGA-Proceedings , Rochester (NY) 1998, pp. 395-409.
11. Herting, H.P.; Goodman, R.M.: Computer to Plate Technologies- The Current Product Realities. TAGA-Proceedings, Rochester (NY) 1998, pp. 312-328.

Acknowledgments

The author would like to thank Prof. Dr. Helmut Kipphan of Heidelberger Druckmaschinen AG for his support, contributions, and valuable comments.

Biography

Martin Schmitt-Lewen has worked for Heidelberger Druckmaschinen AG on "Advanced and Future Technologies" since 1997. He received his Ph.D. in experimental physics at the University of Würzburg, Germany in 1994.